**MICRO SWITCH**
FREEPORT, ILLINOIS, U.S.A.
A DIVISION OF HONEYWELL
FED. MFG. CODE 91929

# SWITCH–ENCLOSED

CATALOG LISTING
**BZE6-2RN7**

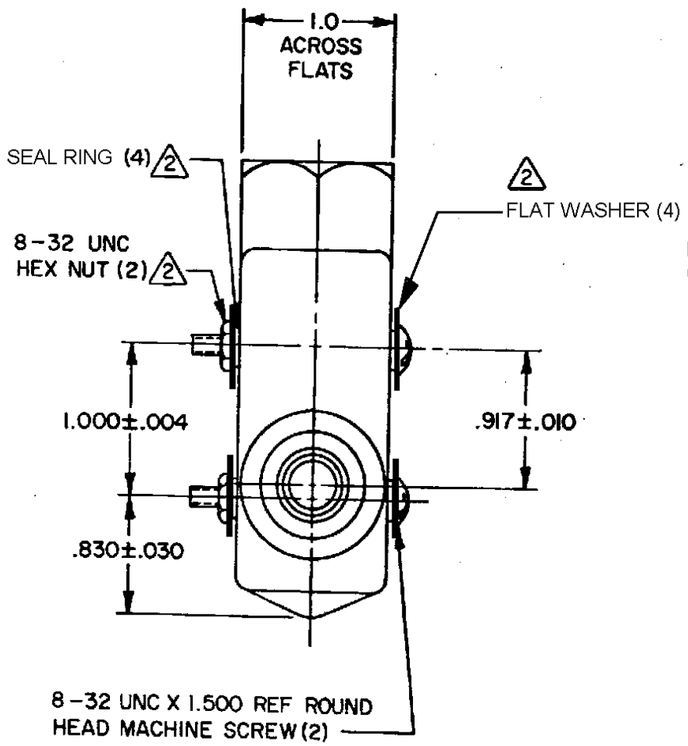


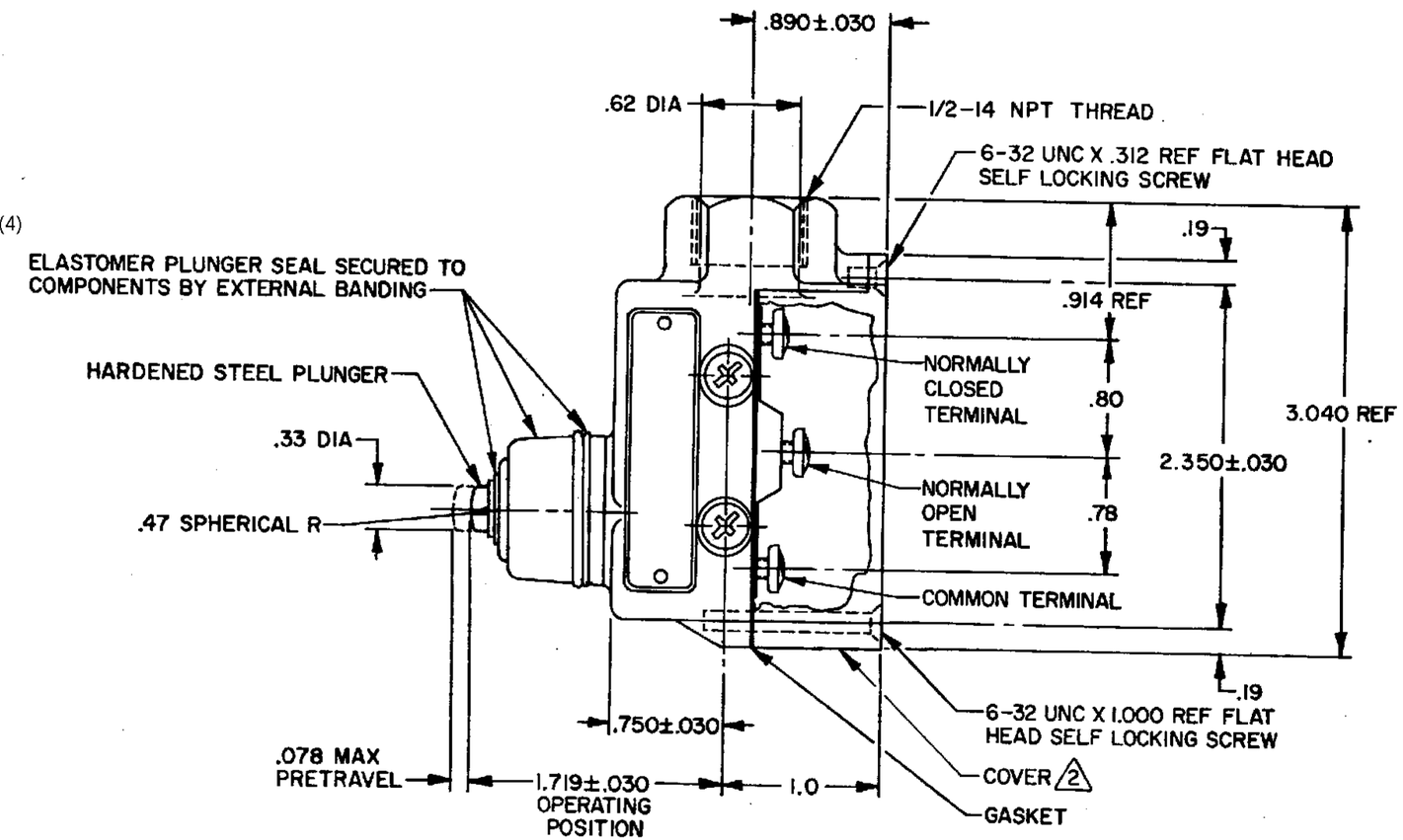


NOTES–

1 – 6-32 UNC X .219 REF BINDING HEAD TERMINAL SCREW AND CUPWASHER (3)
2 FURNISHED UNASSEMBLED

3 - SEAL RATING: NEMA1,3
IP54

THIS DRAWING COVERS A PROPRIETARY ITEM AND IS THE PROPERTY OF MICRO SWITCH, A DIVISION OF HONEYWELL. THIS DRAWING IS NOT TO BE COPIED OR USED WITHOUT THE APPROVAL OF MICRO SWITCH.

| CHARACTERISTICS | |
|---|---|
| OPERATING FORCE | 9-24 OZ |
| RELEASE FORCE | 4 OZ MIN |
| DIFFERENTIAL TRAVEL | .002 MAX |
| OVERTRAVEL | .219 MIN |
| BASIC SWITCH REPLACEMENT | BZ-2RN730 |

**ELECTRICAL DATA**

CONTACT ARRANGEMENT
S P D T

15A-125, 250 OR 480 VAC, 2A-600 VAC
1/8HP-125 VAC; 1/4HP-250 VAC
CODE L74 1/2A-125 VDC; 1/4A-250 VDC

CE 1.5A, 240Vac

SCALE FULL
DO NOT SCALE PRINT

UNLESS OTHERWISE NOTED
DIMENSIONS ARE IN INCHES
**TOLERANCES ARE:**

| | | |
|---|---|---|
| ONE PLACE | (.0) | ±.030 |
| TWO PLACE | (.00) | ±.015 |
| THREE PLACE | (.000) | ±.005 |
| ANGLES | | ± |

WEIGHT .56 LB

BZE6-2RN7 | M | DRAWING NUMBER | REPLACES | RELEASE NO. | 22 NOV 05 | ISSUE 12 | BP | CHECK

REVISIONS

| | | | |
|---|---|---|---|
| A | NEW DWG CO-15200 | KSW 8 AUG 77 | 19 AUG 77 |
| B | CO38200 | TMM 6 OCT 77 | |
| C | CO 39504 | GLH 29 NOV 77 | POL |
| D | CO 53191-H | TMM 18 MAY 84 | CHECK |
| E | CO55989 | JAP 8 NOV 84 | 77 |
| F | CO 54958-H | WJM 8 FEB 85 | 19 AUG 77 |
| G | CO72476 | MAM 4 SEP 92 | |
| H | CO-77179A | KDR 17 FEB 94 | GCH |
| J | 0017057 | VKR 22NOV05 | CHECK |

DRAWN KSW 8 AUG 77

FO-5251-A